Join Now: https://join.hsslive.in Downloaded from https://www.hsslive.in ®

2.ELECTROCHEMISTRY

It is a branch of chemistry that deals with the relationship between chemical energy and electrical energy and their inter conversions.

ELECTROCHEMICAL CELLS

These are devices that convert chemical energy of some redox reactions to electrical energy. They are also called Galvanic cells or Voltaic cells. Example for Galvanic cell is Daniel cell.

It is constructed by dipping a Zn rod in $ZnSO_4$ solution and a Cu rod in $CuSO_4$ solution. The two solutions are connected externally by a metallic wire through a voltmeter and a switch and internally by a salt bridge.

A salt bridge is a U-tube containing an inert electrolyte like $NaNO_3$ or KNO_3 in a gelly like substance. The functions of a salt bridge are:

1. *To complete the electrical circute.*
2. *To maintain the electrical neutrality in the two half cells.*

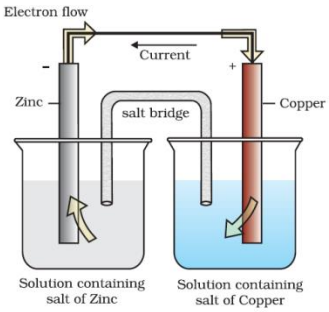

The reaction taking place in a Daniel cell is

$$Zn(s) + Cu^{2+}(aq) \rightarrow Zn^{2+}(aq) + Cu(s)$$

This reaction is a combination of two half reactions:

(i) $Cu^{2+} + 2e^- \rightarrow Cu(s)$ (reduction half reaction)

(ii) $Zn(s) \rightarrow Zn^{2+} + 2e^-$ (oxidation half reaction)

These reactions occur in two different portions of the Daniel cell. The reduction half reaction occurs on the copper electrode while the oxidation half reaction occurs on the zinc electrode. These two portions of the cell are also called **half-cells** or **redox couples**. The copper electrode may be called the reduction half-cell and the zinc electrode, the oxidation half-cell.

Electrode Potential

*The tendency of a metal to lose or gain electron when it is in contact with its own solution is called **electrode potential**.* When the concentrations of all the species involved in a half-cell is unity then the electrode potential is known as **standard electrode potential**. According to IUPAC convention, *standard reduction potential is taken as the standard electrode potential*.

In a galvanic cell, the half-cell in which *oxidation* takes place is called **anode** and it has a negative potential. The other half-cell in which *reduction* takes place is called **cathode** and it has a positive potential.

In a cell, the electrons flow from negative electrode to positive electrode and the current flows in the opposite direction.

The potential difference between the two electrodes of a galvanic cell is called the *cell potential* and is measured in volts. *The **cell potential** is the difference between the electrode potentials (reduction potentials) of the cathode and anode.*

*The cell **electromotive force (emf)** of the cell is the potential difference between the two electrodes, when no current is flow through the cell*. It is denoted by E_{cell}.

i.e. $E_{cell} = E_{cathode} - E_{anode}$

By convention, while representing a galvanic cell, the anode is written on the left side and the cathode on the right side. Metal and electrolyte solution are separated by putting a vertical line and a salt bridge is denoted by putting a double vertical line. [The concentration of the electrolyte is shown in simple bracket]. For Daniel cell, the cell representation is:

$Zn(s)|Zn^{2+}(aq) || Cu^{2+}(aq)|Cu(s)$

Under this convention the emf of the cell is positive and is given by the potential of the half-cell on the right hand side (cathode) minus the potential of the half-cell on the left hand side (anode).

i.e. $E_{cell} = E_{right} - E_{left}$

Or, $E_{cell} = E_R - E_L$

Join Now: https://join.hsslive.in Downloaded from https://www.hsslive.in ®

Measurement of Electrode Potential

The potential of an individual half-cell cannot be measured. We can measure only the difference between the two half-cell potentials that gives the emf of the cell. For this purpose a half-cell called **Standard Hydrogen Electrode (SHE) or Normal Hydrogen Electrode (NHE)** is used.

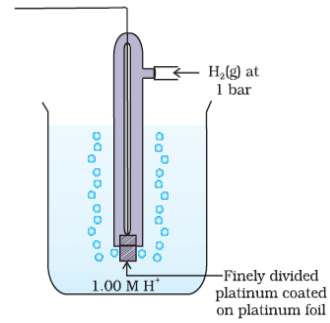

It consists of a platinum foil coated with platinum black (finely divided Pt). The electrode is dipped in an acidic solution of one molar concentration and pure hydrogen gas at 1 bar pressure and 298K is bubbled through it.
It is represented as $Pt(s)|H_2(g)|H^+(aq)$.
By convention, the electrode potential of SHE is taken as zero.

To determine the electrode potential of an electrode, it is connected In series with the standard hydrogen electrode through a volt meter. Here SHE is always connected on LHS and the emf of the resulting cell is determined by the equation,

$$E_{cell} = E_R - E_L$$

Since the electrode potential of SHE is zero, the value of E_{cell} is equal to the electrode potential of the given electrode.

If the standard electrode potential of an electrode is greater than zero (i.e. +ve), then its reduced form is more stable compared to hydrogen gas. Similarly, if the standard electrode potential is negative, then hydrogen gas is more stable than the reduced form of the species.

Electrochemical series

It is a series in which various electrodes are arranged in the decreasing order of their reduction potential. In this table, fluorine is at the top indicating that fluorine gas (F_2) has the maximum tendency to get reduced to fluoride ions (F^-). Therefore fluorine gas is the strongest oxidising agent and fluoride ion is the weakest reducing agent.
Lithium has the lowest electrode potential indicating that lithium ion is the weakest oxidising agent while lithium metal is the most powerful reducing agent in an aqueous solution.

Nernst Equation

It is an equation relating electrode potential or emf of a cell with electrolytic concentration.

(i) Nernst equation relating Electrode potential and Electrolytic concentration:

Consider the electrode reaction: $M^{n+}_{(aq)} + ne^- \rightarrow M_{(s)}$
Nernst equation for the electrode potential can be given by:

$$E_{(M^{n+}|M)} = E^0_{(M^{n+}|M)} + \frac{RT}{nF} \ln \frac{[M^{n+}]}{[M]}$$

Since the concentration of any solid is taken as unity, the above equation becomes:

$$E_{(M^{n+}|M)} = E^0_{(M^{n+}|M)} + \frac{RT}{nF} \ln[M^{n+}]$$

Or, $E_{(M^{n+}|M)} = E^0_{(M^{n+}|M)} + \frac{2.303\,RT}{nF} \log [M^{n+}]$

or, $\boxed{E_{el.} = E^0_{el} + \frac{2.303\,RT}{nF} \log [M^{n+}]}$

or, $\boxed{E_{el.} = E^0_{el} - \frac{2.303\,RT}{nF} \log \frac{1}{[M^{n+}]}}$

Where E^0_{el} is the standard electrode potential of the electrode, R is the universal gas constant (R = 8.314 $JK^{-1}\,mol^{-1}$), F is Faraday constant (96500 C/mol), T is temperature in Kelvin and $[M^{n+}]$ is the concentration of the ion M^{n+}.

On substituting the values of R and F at 298K, the equation becomes: $\boxed{E_{el} = E^0_{el} + \frac{0.0591}{n} \log [M^{n+}]}$

 Downloaded from https://www.hsslive.in ®

(ii) Nernst equation relating emf of a cell and electrolytic concentration:

A Daniel cell can be represented as: $Zn(s)|Zn^{2+}(aq)||Cu^{2+}(aq)|Cu(s)$

The electrode reactions are:

$Zn(s) \longrightarrow Zn^{2+} + 2e^-$ (anode reaction)

$Cu^{2+} + 2e^- \longrightarrow Cu(s)$ (cathode reaction)

The electrode potentials are:

For anode: $E_{(Zn^{2+}|Zn)} = E^0_{(Zn^{2+}|Zn)} + \frac{RT}{2F} \ln [Zn^{2+}]$

For cathode: $E_{(Cu^{2+}|Cu)} = E^0_{(Cu^{2+}|Cu)} + \frac{RT}{2F} \ln [Cu^{2+}]$

The cell potential, $E_{cell} = E_{(Cu^{2+}|Cu)} - E_{(Zn^{2+}|Zn)}$

$$= \{E^0_{(Cu^{2+}|Cu)} + \frac{RT}{2F} \ln [Cu^{2+}]\} - \{E^0_{(Zn^{2+}|Zn)} + \frac{RT}{2F} \ln [Zn^{2+}]\}$$

$$= [E^0_{(Cu^{2+}|Cu)} - E^0_{(Zn^{2+}|Zn)}] + \frac{RT}{2F} \ln \frac{[Cu^{2+}]}{[Zn^{2+}]}$$

Or, $E_{cell} = [E^0_{(Cu^{2+}|Cu)} - E^0_{(Zn^{2+}|Zn)}] - \frac{RT}{2F} \ln \frac{[Zn^{2+}]}{[Cu^{2+}]}$

Or, $E_{cell} = E^0_{cell} - \frac{RT}{2F} \ln \frac{[Zn^{2+}]}{[Cu^{2+}]}$ (Since $E^0_{(Cu^{2+}|Cu)} - E^0_{(Zn^{2+}|Zn)} = E^0_{cell}$)

On changing the base of logarithm, we get

$$E_{cell} = E^0_{cell} - \frac{2.303\,RT}{2F} \log \frac{[Zn^{2+}]}{[Cu^{2+}]}$$

On substituting the values of R (8.314 $JK^{-1}\,mol^{-1}$), F (96500 C mol^{-1}) at 298K, the above equation becomes,

$$E_{cell} = E^0_{cell} - \frac{0.0591}{2} \log \frac{[Zn^{2+}]}{[Cu^{2+}]}$$

For a general electrochemical reaction of the type:

$$aA + bB \xrightarrow{ne^-} cC + dD$$

Nernst equation can be written as:

$$\boxed{E_{cell} = E^0_{cell} - \frac{0.0591}{n} \log \frac{[C]^c[D]^d}{[A]^a[B]^b}}$$

(where n is the no. of electrons involved in the cell reaction)

<u>Equilibrium Constant from Nernst Equation</u>

For a Daniel cell, the emf of the cell at 298K is given by:

$$E_{cell} = E^0_{cell} - \frac{0.0591}{2} \log \frac{[Zn^{2+}]}{[Cu^{2+}]}$$

When the cell reaction attains equilibrium, $E_{cell} = 0$

So, $0 = E^0_{cell} - \frac{0.0591}{2} \log \frac{[Zn^{2+}]}{[Cu^{2+}]}$

Or, $E^0_{cell} = \frac{0.0591}{2} \log \frac{[Zn^{2+}]}{[Cu^{2+}]}$

But at equilibrium, $\frac{[Zn^{2+}]}{[Cu^{2+}]} = K_c$, the equilibrium constant.

So the above equation becomes, $E^0_{cell} = \frac{0.0591}{2} \log K_c$

In General, $\boxed{E^0_{cell} = \frac{2.303\,RT}{nF} \log K_c}$

On substituting the values of R (8.314 $JK^{-1}\,mol^{-1}$), F (96500 C mol^{-1}) at 298K, the above equation becomes,

$$\boxed{E^0_{cell} = \frac{0.0591}{n} \log K_c}$$

Join Now: https://join.hsslive.in Downloaded from https://www.hsslive.in ®

Electrochemical Cell and Gibbs Energy of the Reaction

Electrical work done in one second is equal to electrical potential multiplied by total charge passed. Also the reversible work done by a galvanic cell is equal to decrease in its Gibbs energy. Therefore, if the emf of the cell is E_{cell} and nF is the amount of charge passed,

then the Gibbs energy of the reaction, $\Delta G = -nFE_{cell}$

If the concentration of all the reacting species is unity, then $E_{cell} = E^0_{cell}$.

So, $\Delta G^0 = -nFE^0_{cell}$

Thus, from the measurement of E^0_{cell}, we can calculate the standard Gibbs energy of the reaction.

By knowing ΔG^0, we can calculate equilibrium constant by the equation: $\Delta G^0 = -RT \ln K_c$.

Or, $\Delta G^0 = -2.303RT \log K_c$

Conductance of Electrolytic Solutions

Resistance (R): The electrical resistance is the hindrance to the flow of electrons. Its unit is ohm (Ω). The resistance of a conductor is directly proportional to the length of the conductor (l) and inversely proportional to the area of cross-section (A) of the conductor.

i.e. $R \propto l/A$

or, R = a constant x l/A

or, R = ρ x l/A, where ρ (rho) is a constant called resistivity. It is defined as the resistance offered by a conductor having unit length and unit area of cross-section.

Its unit is ohm-metre (Ω m) or ohm-centimetre (Ω cm).

1 Ω m = 100 Ω cm, 1 Ω cm = 10^{-2} Ω m

Conductance (G): It is the reciprocal of resistance.

i.e. Conductance, $G = \frac{1}{\text{Resistance (R)}}$

Its unit is ohm^{-1} or mho or siemens (S)

Or, $G = \frac{1}{\rho} \times \frac{A}{l}$

Or, $G = \kappa \times \frac{A}{l}$ [where κ (kappa) = $\frac{1}{\rho}$, the conductivity.

It is defined as the conductance of a conductor having unit length and unit area of cross-section.

Its unit is $ohm^{-1}\ m^{-1}$ or mho m^{-1} or S m^{-1}.

1 S cm^{-1} = 100 S m^{-1}

1 S m^{-1} = 10^{-2} S cm^{-1}

There are two types of conductance - electronic or metallic conductance and electrolytic or ionic conductance.

Electrical conductance through metals is called *metallic or electronic conductance* and it is due to the movement of electrons. It depends on the nature and structure of the metal, the no. of valence electrons per atoms and temperature. For electronic conductance, when temperature increases, conduction decreases.

The conductance of electricity by ions present in solutions is called electrolytic or ionic conductance. It depends on i) the nature of electrolyte ii) size of the ion produced and their solvation iii) the nature of the solvent and its viscosity iv) concentration of the electrolyte and v) temperature (As temperature increases electrolytic conduction also increases).

Note: *Substances which allow the passage of electricity in molten state or in solution state are called electrolytes. On the passage of electricity, they undergo chemical decomposition.*

Measurement of the conductivity of ionic solutions

We know that, conductance, $G = \kappa \times \frac{A}{l}$

So conductivity, $\kappa = G \times \frac{l}{A}$

Join Now: https://join.hsslive.in Downloaded from https://www.hsslive.in ®

The quantity l/A is called ***cell constant*** (G*). It depends on the distance between the electrodes and their area of cross-section. Its unit is m^{-1}.

i.e. conductivity = conductance x cell constant

So, in order to determine the conductivity of an electrolytic solution, first determine the resistance by using a Wheatstone bridge. It consists of two resistances R_3 and R_4, a variable resistance R_1 and the conductivity cell having the unknown resistance R_2. It is connected to an AC source (an oscillator, O) and a suitable detector (a headphone or other electronic device, P). Direct current (DC) cannot be used since it causes the decomposition of the solution.

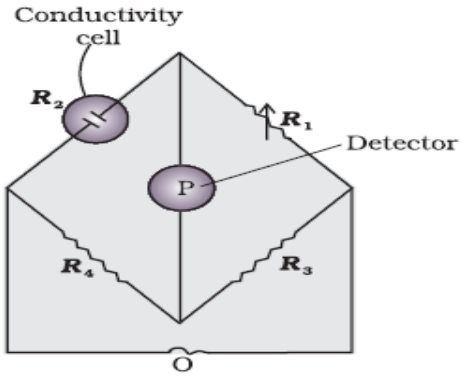

The bridge is balanced, when no current passes through the detector.

Under this condition, $\frac{R_2}{R_1} = \frac{R_4}{R_3}$

Therefore, the unknown resistance, $R_2 = \frac{R_1 R_4}{R_3}$

By knowing the resistance, we get the value of conductance and conductivity.

Conductivity cell

It consists of two platinum electrodes coated with platinum black (finely powdered platinum). The electrodes are separated by a distance l and their area of cross-section is A.

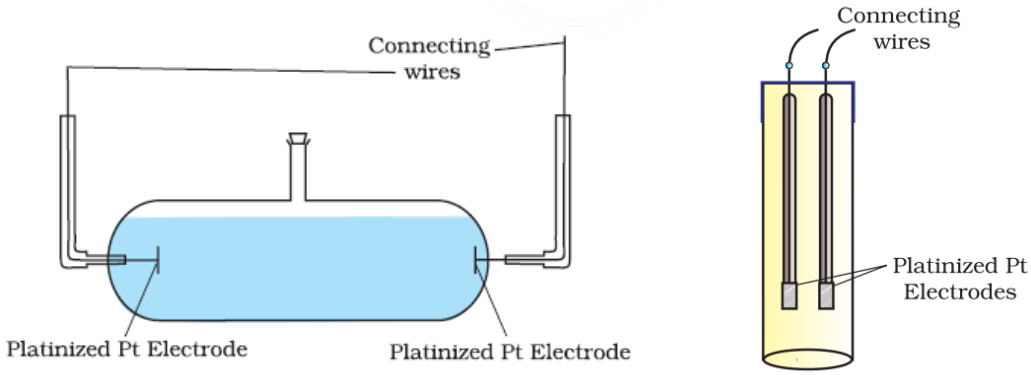

Two types of conductivity cells

The solution confined between the electrodes can be considered as a column of length l and area of cross section A. The cell constant of a conductivity cell is usually determined by measuring the resistance of the cell containing a solution whose conductivity is already known (e.g. KCl solution).

Molar conductivity (Λ_m – lambda m):

It is the conductivity of a solution containing 1 mole of an electrolyte, placed in a conductivity cell with unit distance between the electrodes.

OR,

Molar conductivity of a solution at a given concentration is the conductance of 'V' volume of a solution containing one mole of electrolyte kept between two electrodes with area of cross section A and distance of unit length.

 Downloaded from https://www.hsslive.in ®

It is related to conductivity of the solution by the equation,

$$\Lambda_m = \frac{k}{C}$$ (where C is the concentration of the solution)

Or, $$\Lambda_m = \frac{1000\,k}{M}$$ (where M is the molarity of the solution)

The unit of molar conductivity is $\Omega^{-1}cm^2\,mol^{-1}$ or $S\,cm^2\,mol^{-1}$.

$1S\,m^2\,mol^{-1} = 10^4\,S\,cm^2\,mol^{-1}$

$1S\,cm^2\,mol^{-1} = 10^{-4}\,S\,m^2\,mol^{-1}$

Variation of conductivity and Molar conductivity with concentration (dilution)

Both conductivity and molar conductivity change with the concentration of the electrolyte. We know that when a solution is diluted, its concentration decreases. *For both strong and weak electrolytes, conductivity always decreases with dilution*. This is because conductivity is the conductance of unit volume of electrolytic solution. *As dilution increases, the number of ions per unit volume decreases and hence the conductivity decreases*.

For both strong and weak electrolytes, the molar conductivity increases with dilution (or decreases with increase in concentration), but due to different reasons.

For strong electrolytes, as dilution increases, the force of attraction between the ions decreases and hence the ionic mobility increases. So, molar conductivity increases. When dilution reaches maximum or concentration approaches zero, the molar conductivity becomes maximum and it is called the limiting molar conductivity (Λ_m^0).

For strong electrolytes, the relation between Λ_m and concentration can be given as: $\Lambda_m = \Lambda_m^0 - A\sqrt{c}$

Where 'c' is the concentration and A is a constant depending on temperature, the nature of the electrolyte and the nature of the solvent. All electrolytes of a particular type have the same value for 'A'.

For weak electrolytes, as dilution increases, the degree of dissociation increases. So the number of ions and hence the molar conductivity increases.

The variation of Λ_m for strong and weak electrolytes is shown in the following graphs:

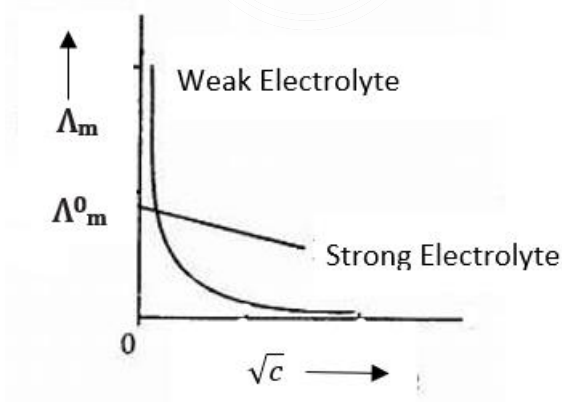

For strong electrolytes, the value of Λ_m^0 can be determined by the extending the graph to y-axis. But for weak electrolytes, it is not possible, since the graph is not a straight line. So their Λ_m^0 values are calculated by applying Kohlrausch's law of independent migration of ions.

Kohlrausch's law of independent migration of ions

The law states that the limiting molar conductivity of an electrolyte is equal to the sum of the individual contributions of the anion and the cation of the electrolyte.

Thus if an electrolyte on dissociation gives $n_{(+)}$ cations and $n_{(-)}$ anions, its limiting molar conductivity is given as: $\Lambda^0_m = n_{(+)}\lambda^0_{(+)} + n_{(-)}\lambda^0_{(-)}$

For an electrolyte like AxBy the dissociation can be denoted as: $A_xB_y \longrightarrow xA^{y+} + yB^{x-}$

$$\Lambda^0_{m(AxBy)} = x.\lambda^0_{(A^{y+})} + y.\lambda^0_{(B^{x-})}$$

 Downloaded from https://www.hsslive.in ®

For NaCl, $\Lambda^0_{m\,(NaCl)} = \lambda^0_{(Na^+)} + \lambda^0_{(Cl^-)}$

For $CaCl_2$, $\Lambda^0_{m\,(CaCl2)} = \lambda^0_{(Ca^{2+})} + 2 \times \lambda^0_{(Cl^-)}$

Applications of Kohlrausch's law

1) ***Determination of λ^0m of weak electrolytes***

By knowing the Λ^0_m values of strong electrolytes, we can calculate Λ^0_m of weak electrolytes. For e.g. we can determine the Λ^0_m of acetic acid (CH_3COOH) by knowing the Λ^0_m of CH_3COONa, NaCl and HCl as follows:

$\Lambda^0_{m(CH3COONa)} = \lambda^0_{CH3COO-} + \lambda^0_{Na+}$ ..... (1)

$\Lambda^0_{m(HCl)} = \lambda^0_{H+} + \lambda^0_{Cl-}$ ..... (2)

$\Lambda^0_{m(NaCl)} = \lambda^0_{Na+} + \lambda^0_{Cl-}$ ..... (3)

(1) + (2) – (3) gives:

$$\Lambda^0_{m(CH3COONa)} + \Lambda^0_{m(HCl)} - \Lambda^0_{m(NaCl)} = \lambda^0_{CH3COO-} + \cancel{\lambda^0_{Na+}} + \lambda^0_{H+} + \cancel{\lambda^0_{Cl-}} - \cancel{\lambda^0_{Na+}} - \cancel{\lambda^0_{Cl-}}$$

$$= \Lambda^0_{m(CH3COOH)}$$

2) ***Determination of degree of dissociation of weak electrolytes***

By knowing the molar conductivity at a particular concentration (Λ^c_m) and limiting molar conductivity (Λ^0_m), we can calculate the degree of dissociation (α) as, $\alpha = \frac{\Lambda^c_m}{\Lambda^0_m}$

By using α, we can calculate the dissociation constant of weak acid (K_a) as: $K_a = \frac{c\alpha^2}{1-\alpha}$

Electrolytic Cells and Electrolysis

In an electrolytic cell, the electrical energy is converted to chemical energy. The dissociation of an electrolyte by the passage of electricity is called electrolysis.

For e.g. when $CuSO_4$ solution is electrolysed by Cu electrodes, Cu is deposited at the cathode and Cu^{2+} ions are liberated from the anode.

Quantitative Aspects of electrolysis – Faraday's laws

1) **Faraday's first law**

It states that the amount of substance deposited or liberated at the electrodes (m) is directly proportional to the quantity of electricity (Q) flowing through the electrolyte.

Mathematically, $m \propto Q$

Or, $m = zQ$

Where z is a constant called electrochemical equivalent (ECE). $Z = \frac{\text{Equivalent weight}}{96500}$

Equivalent weight of an ion = $\frac{\text{Atomic weight}}{\text{valency}}$

But quantity of electricity is the product of current in ampere (I) and time in second (t).

i.e. Q = It

Therefore, **m= zIt**

1 Faraday is the charge of 1 mole of electron or it is the amount of electricity required to deposit one gram equivalent of any substance. Its value is 96487 C mol^{-1} or, 96500 C mol^{-1}.

For the deposition of 1 mole of Na, the amount of charge required = 1 F (Since $Na^+ + e^- \rightarrow Na$)

For Ca, Q = 2F (since $Ca^{2+} + 2e^- \rightarrow Ca$)

 Downloaded from https://www.hsslive.in ®

2) Faraday's second law

It *states that when the same quantity of electricity is passed through solutions of different substances, the amount of substance deposited or liberated is directly proportional to their chemical equivalence.*

For e.g. when same quantity of electricity is passed through solutions of two electrolytes A and B, then

$$\frac{\text{Mass of A deposited}}{\text{Mass of B deposited}} = \frac{\text{Equivalent mass of A}}{\text{Equivalent mass of B}}$$

Products of electrolysis

The products of electrolysis depend on the following factors:

i) *The nature of the electrolyte*: The electrolyte may be in molten state or in aqueous solution state. For e.g. if molten NaCl is electrolysed, Na is deposited at the cathode and chlorine is liberated at the anode.

$NaCl \longrightarrow Na^+ + Cl^-$

At cathode: $Na^+ + e^- \longrightarrow Na$

At anode: $Cl^- \longrightarrow ½ Cl_2 + e^-$

If NaCl solution is electrolysed, we get H_2 gas at the cathode and Cl_2 gas at the anode.

NaCl solution contains 4 ions – Na^+, Cl^-, H^+ and OH^-

Cathode reaction: $H^+ + e^- \longrightarrow ½ H_2$

Anode reaction: $Cl^- \longrightarrow ½ Cl_2 + e^-$

NaOH is formed in the solution.

ii) *The type of electrodes used*: If the electrode is inert (e.g. Pt, gold, graphite etc.), it does not participate in the electrode reaction. While if the electrode is reactive, it also participates in the electrode reaction.

iii) *The different oxidising and reducing species present in the electrolytic cell and their standard electrode potentials.* Some of the electrochemical processes are very slow and they do not take place at lower voltages. So some extra potential (called *overpotential*) has to be applied, which makes such process more difficult to occur.

For e.g. during the electrolysis of NaCl solution, the possible reactions at anode are:

$Cl^-(aq) \longrightarrow ½ Cl_2(g) + e^-$; $E^0_{cell} = 1.36$ V

$2H_2O(l) \longrightarrow O_2(g) + 4H^+(aq) + 4e^-$; $E^0_{cell} = 1.23$ V

At anode, the reaction with lower value of E^0_{cell} is preferred and so water should get oxidised in preference to Cl^- (aq). However, on account of overpotential of oxygen, the first reaction is preferred and hence Cl_2 is formed at anode.

When dilute H_2SO_4 is electrolysed, O_2 gas is liberated from the anode.

$2H_2O(l) \longrightarrow O_2(g) + 4H^+(aq) + 4e^-$

while if we use conc. H_2SO_4, peroxodisulphate ion is formed at the anode.

$2SO_4^{2-}(aq) \longrightarrow S_2O_8^{2-}(aq) + 2e^-$

In both cases H_2 gas is liberated from the cathode.

Batteries

A battery is basically a galvanic cell in which the chemical energy of a redox reaction is converted to electrical energy. They are of mainly 2 types – primary batteries and secondary batteries.

a) **Primary cells:**

These are cells which cannot be recharged or reused. Here the reaction occurs only once and after use over a period of time, they become dead. E.g. ***Dry cell, mercury button cell*** etc.

Join Now: https://join.hsslive.in Downloaded from https://www.hsslive.in ®

1. **Dry Cell**

It is a compact form of Leclanche cell. It consists of a zinc container as anode and a carbon (graphite) rod surrounded by powdered manganese dioxide (MnO_2) and carbon as cathode. The space between the electrodes is filled by a moist paste of ammonium chloride (NH_4Cl) and zinc chloride ($ZnCl_2$). The electrode reactions are:

Anode: $Zn(s) \longrightarrow Zn^{2+} + 2e^-$

Cathode: $MnO_2 + NH_4^+ + e^- \longrightarrow MnO(OH) + NH_3$

Ammonia produced in this reaction forms a complex with Zn^{2+} and thus corrodes the cell. The cell has a potential of nearly 1.5 V.

2. **Mercury cell**

Here the anode is zinc – mercury amalgam and cathode is a paste of HgO and carbon. The electrolyte is a paste of KOH and ZnO. The electrode reactions are:

Anode reaction: $Zn(Hg) + 2OH^- \longrightarrow ZnO(s) + H_2O + 2e^-$

Cathode reaction: $HgO + H_2O + 2e^- \longrightarrow Hg(l) + 2OH^-$

The overall reaction is : $Zn(Hg) + HgO(s) \longrightarrow ZnO(s) + Hg(l)$

The cell has a constant potential of 1.35 V, since the overall reaction does not involve any ion in solution.

b) Secondary cells

A secondary cell can be recharged and reused again and again. Here the cell reaction can be reversed by passing current through it in the opposite direction. E.g.: Lead storage cell, Ni – Cd cell (Nicad cell).

Lead storage cell:

It is used in automobiles and invertors. It consists of lead as anode and a grid of lead packed with lead dioxide (PbO_2) as the cathode. The electrolyte is 38% H_2SO_4 solution.

The cell reactions are:

Anode: $Pb(s) + SO_4^{2-}(aq) \longrightarrow PbSO_4(s) + 2e^-$

Cathode: $PbO_2(s) + SO_4^{2-}(aq) + 4H^+(aq) + 2e^- \longrightarrow PbSO_4(s) + 2H_2O(l)$

The overall cell reaction is: $Pb(s) + PbO_2(s) + 2H_2SO_4(aq) \longrightarrow 2PbSO_4(s) + 2H_2O(l)$

On charging the battery, the reaction is reversed and $PbSO_4(s)$ on anode and cathode is converted into Pb and PbO_2, respectively.

Another example for a secondary cell is nickel – cadmium cell. Here the overall cell reaction is:

$Cd(s) + 2Ni(OH)_3(s) \longrightarrow CdO(s) + 2Ni(OH)_2(s) + H_2O(l)$

Differences between Primary cell and Secondary cell

Primary cell	Secondary cell
Cannot be recharged or reused.	Can be recharged and reused.
The cell reaction cannot be reversed.	The cell reaction can be reversed.
E.g. Dry cell, Mercury cell	E.g.: Lead storage cell, Ni-Cd cell

Fuel cells

These are galvanic cells which convert the energy of combustion of fuels like hydrogen, methane, methanol, etc. directly into electrical energy.

One example for fuel cell is ***Hydrogen – Oxygen fuel cell***, which is used in the Apollo space program. Here hydrogen and oxygen are bubbled through porous carbon electrodes into concentrated aqueous sodium hydroxide solution. To increase the rate of electrode reactions, catalysts like finely divided platinum or palladium metal are filled into the electrodes.

The electrode reactions are:

Cathode: $O_2(g) + 2H_2O(l) + 4e^- \longrightarrow 4OH^-(aq)$

 Downloaded from https://www.hsslive.in ®

Anode: $2H_2(g) + 4OH^-(aq) \longrightarrow 4H_2O(l) + 4e^-$

Overall reaction is: $2H_2(g) + O_2(g) \longrightarrow 2\ H_2O(l)$

Advantages of Fuel cells

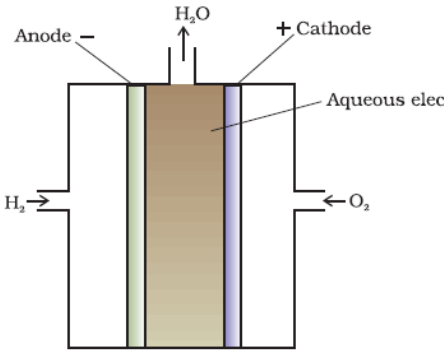

1. The cell works continuously as long as the reactants are supplied.
2. It has higher efficiency as compared to other conventional cells.
3. It is eco-friendly (i.e. pollution free) since water is the only product formed.
4. Water obtained from H_2 – O_2 fuel cell can be used for drinking.

Corrosion: It is the process of formation of oxide or other compounds of a metal on its surface by the action of air, water-vapour, CO_2 etc. Some common examples are: The rusting of iron, tarnishing of silver, formation of green coating on copper and bronze (verdigris) etc.
Most familiar example for corrosion is rusting of iron.

Chemistry of rusting of iron:

Rusting of iron is a redox reaction, which occurs in presence of air and water. At a particular spot of the metal iron, oxidation takes place and that spot behaves as anode. Here Fe is oxidized to Fe^{2+}.

$$2\ Fe\ (s) \longrightarrow 2\ Fe^{2+} + 4\ e^-$$

Electrons released at anodic spot move through the metal and go to another spot on the metal and reduce oxygen in presence of H^+ [H^+ is formed by dissolving atmospheric CO_2 in moisture]. This spot behaves as cathode. The reaction taking place at the cathodic spot is:

$$O_2(g) + 4\ H^+(aq) + 4\ e^- \longrightarrow 2\ H_2O\ (l\ )$$

The overall reaction is: $2Fe(s)+O_2(g) + 4H^+(aq) \longrightarrow 2Fe^{2+}(aq)+ 2\ H_2O\ (l\ )$

The ferrous ions (Fe^{2+}) are further oxidised to ferric ions (Fe^{3+}) and finally to hydrated ferric oxide (Fe_2O_3. x H_2O), which is called rust.

Methods used to prevent corrosion

1. By coating the metal surface with paint, varnish etc.
2. By coating the metal surface with another electropositive metal like zinc, magnesium etc. The coating of metal with zinc is called galvanisation and the resulting iron is called galvanized iron.
3. By coating with anti-rust solution.
4. An electrochemical method used is connecting the iron object with a sacrificial electrode of another metal (like Mg, Zn, etc.), which corrodes itself but saves the object (sacrificial protection).

^^^